CONSEW

MODEL 99
MODEL 103

OPERATING INSTRUCTIONS

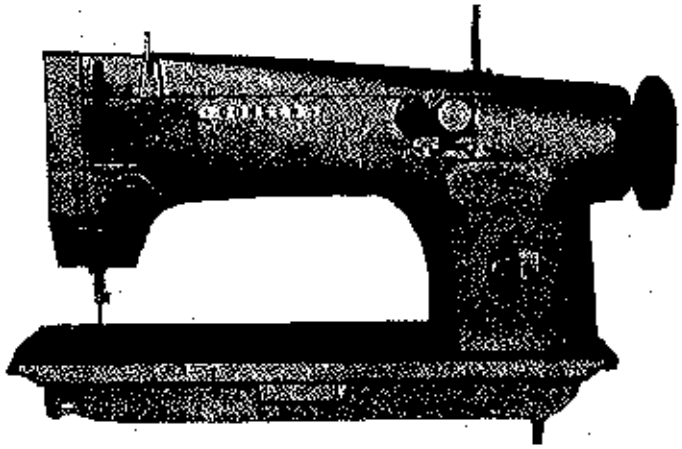

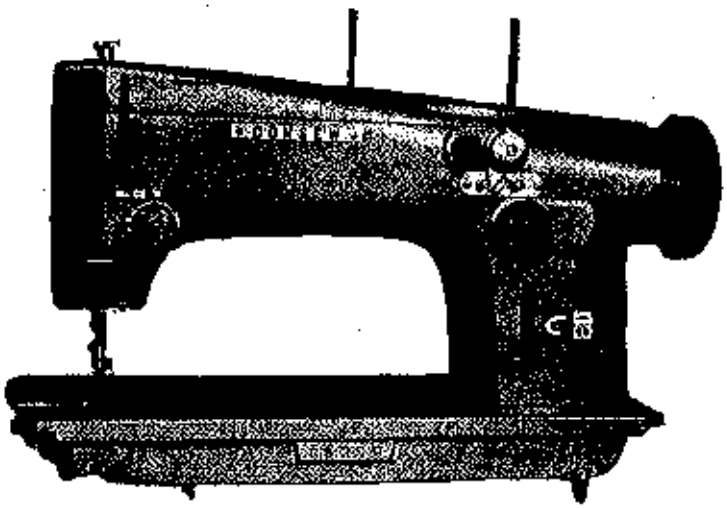

CONSOLIDATED SEWING MACHINE CORP.

NEW YORK
1115 Broadway
New York 10, N.Y.
WAlkins 9-6400

ATLANTA
711 Miami Circle N.E.
Atlanta, Ga.
CEdar 7-6661

LOS ANGELES
163 E. Jefferson Blvd
Los Angeles 17, Cal.
AB 4-6184

MONTREAL
4708 St. Laurence Blvd
Montreal, Canada
CRescent 3-2196

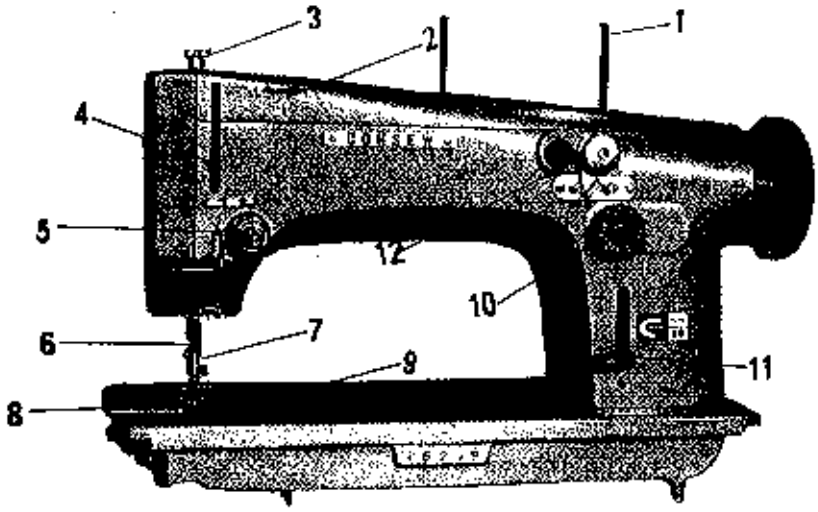

MODEL 99

NAMES OF MAIN PARTS

1. SPOOL PIN
2. THREAD GUIDE
3. PRESSURE REGULATOR
4. TAKE-UP LEVER
5. TENSION REGULATER
6. NEEDLE BAR
7. PRESSER FOOT
8. COVER OR SLIDE PLATE
9. NEEDLE PLATE
10. STITCH LENGTH REGULATOR
11. FEED DIRECTION LEVER (FOR TACKING)
12. ZIGZAG WIDTH REGULATOR

DESCRIPTION: MODEL 99 IS A UNIVERSAL ZIGZAG AND STRAIGHT STITCH SEWING MACHINE WITH A ROTARY HOOK PRODUCING A LOCKSTITCH.

NEEDLES

MODELS 99 AND 103 USE STANDARD NEEDLES STYLE 16×231 UP TO SIZE 19 OR STYLE 16×95 IN ALL SIZES.

THREAD

LEFT TWIST THREAD SHOULD BE USED IN THE NEEDLE. EITHER RIGHT OR LEFT TWIST THREAD CAN BE USED IN THE BOBBIN.

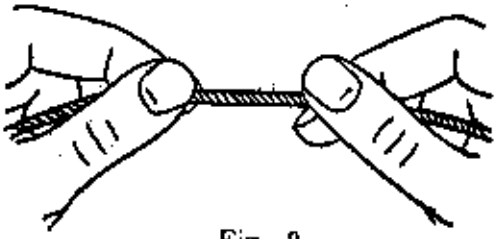

Fig 2

HOW TO DETERMINE THE TWIST OF THE THREAD

HOLD THE THREAD AS SHOWN ABOVE. TWIST IT BETWEEN THE THUMB AND FORE-FINGER OF YOUR HANDS.
IF LEFT TWIST, THE STRANDS WILL WIND TIGHTER.
IF RIGHT TWIST, THE STRANDS WILL UNWIND.

REMOVING THE BOBBIN CASE.

1. RAISE THE NEEDLE BAR TO ITS HIGHEST POINT BY TURNING THE HAND WHEEL TOWARD YOU BY HAND.
2. OPEN THE SLIDE PLATE BY SLIDING IT TO THE LEFT.
3. WITH LEFT THUMB AND FORE-FINGER PLACED UNDER THE BED, OPEN THE HINGED LATCH (A) AT THE FRONT OF THE BOBBIN CASE AND BY MEANS OF THIS LATCH REMOVE THE BOBBIN CASE FROM THE SEWING HOOK.
4. THE BOBBIN FALLS OUT OF THE BOBBIN CASE INTO YOUR HAND, WHEN YOU CLOSE THE BOBBIN CASE LATCH (A).

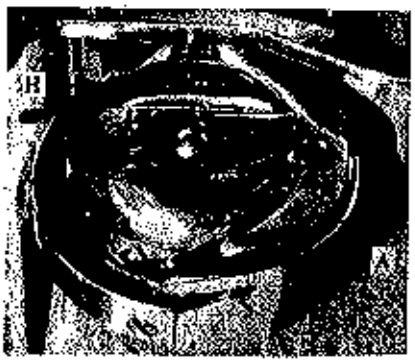

Fig 3

WINDING THE BOBBIN

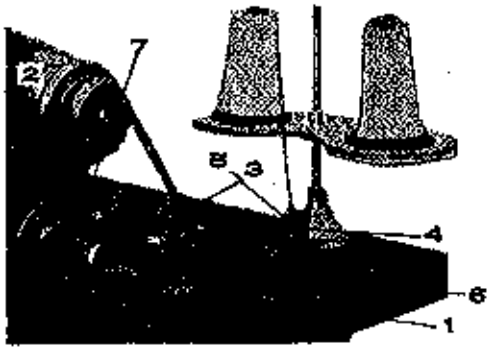

Fig 4

1. PLACE THE BOBBIN (3) ON SPINDLE WINDER.
2. PASS THE THREAD THROUGH THE HOLE (4) OF THE BOBBIN WINDER THREAD GUIDE AND THROUGH THE TENSION DISCS (5) FROM THE REAR
3. PULL THE END OF THE THREAD AND WIND IT AROUND THE EMPTY BOBBIN SEVEN OR EIGHT TIMES FROM THE BOTTOM UP AS SHOWN BY THE ARROW IN FIG. 4.
4. PUSH THE BOBBIN WINDER LEVER (1) DOWN UNTIL THE BOBBIN WINDER WHEEL (2) PRESSES AGAINST THE DRIVE BELT.
5. START THE MACHINE AND THE THREAD WILL BE WOUND UP ON THE BOBBIN. WHEN THE BOBBIN IS FULL, IT WILL RELEASE AUTOMATICALLY AND STOP TURNING.
6. CUT OFF THE THREAD AND REMOVE THE BOBBIN FROM THE SPINDLE.
7. YOU CAN EASILY ADJUST THE MAXIMUM QUANTITY OF THREAD TO BE WOUND UP ON THE BOBBIN BY ADJUSTING THE SCREW (7) WHICH CONTROLS LATCH (6).
8. IF THE THREAD DOES NOT WIND EVENLY ON THE BOBBIN, ADJUST THE POSITION OF THE BOBBIN WINDER THREAD GUIDE (4) BY MOVING IT TO THE RIGHT OR LEFT AFTER LOOSENING THE SCREW.
9. LOOSEN THE TENSION FOR FINE THREAD BY TURNING THE NUT IN COUNTERCLOCKWISE DIRECTION.


Fig. 5-A


Fig. 5-B


Fig. 5-C

THREADING THE BOBBIN CASE

1. HOLD THE BOBBIN CASE BETWEEN THE LEFT THUMB AND FORE-FINGER AS SHOWN ABOVE. WITH ABOUT 2 INCHES OF THREAD TRAILING, HOLD THE BOBBIN BETWEEN THE THUMB AND FIRST TWO FINGERS OF THE RIGHT HAND AS SHOWN IN FIG. 5A.
2. INSERT THE BOBBIN INTO BOBBIN CASE AND PULL THE TRAILING THREAD INTO THE SLOT, DOWN AND TO THE LEFT, UNTIL IT ENTERS THE GROOVED EYE UNDER THE TENSION SPRING FIG. 5B, 5C.
3. LEAD THREAD END THROUGH GUIDE HOLD (H) FIG. 6, LOCATED AT FRONT OF BOBBIN CASE ABOVE HINGED LATCH.

INSERTING THE BOBBIN CASE

1, RAISE THE NEEDLE BAR TO ITS HIGH-EST POINT BY TURNING THE HAND WHEEL TOWARD YOU BY HAND.

2, AFTER SLIDING OUT THE SLIDE PLATE HOLD THE BOBBIN CASE LATCH WITH LEFT THUMB AND FORE FINGER TO PREVENT THE BOBBIN FROM FALLING OUT.

3, PRESS THE BOBBIN CASE ONTO POST (P) UNTIL THE PROTRUDING FINGER (C) ENTERS THE NOTCH (B) OF HOOK. CLOSE THE LATCH.

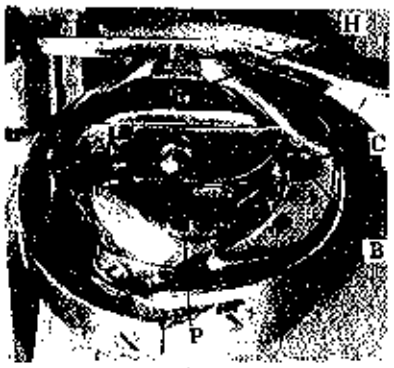

Fig 6

NOTE : BE SURE THAT THE PROTRUDING FINGER ENTERS THE NOTCH PROPERLY AND IN CORRECT POSITION.

THREADING THE MACHINE

1, RAISE THE THREAD TAKE-UP LEVER (7) TO ITS HIGHEST POSITION BY TURNING THE HAND WHEEL TOWARD YOU BY HAND

2, LEAD THE THREAD THROUGH THE HOLE (1) OF THE SPOOL PIN AND THE THREE HOLE THREAD GUIDE (2).

3, RUN THE THREAD BENEATH AND AROUND THE TENSION DISCS (3) FROM RIGHT TO LEFT.

4, BRING THE THREAD OVER THE LOOP OF THE CHECK SPRING (4) AND DOWN AGAIN UNDER THE RETAINING HOOK (5) FROM RIGHT TO LEFT.

6, NOW RUN THE THREVD DOWN THROUGH THE THREAD GUIDES (6) & (8).

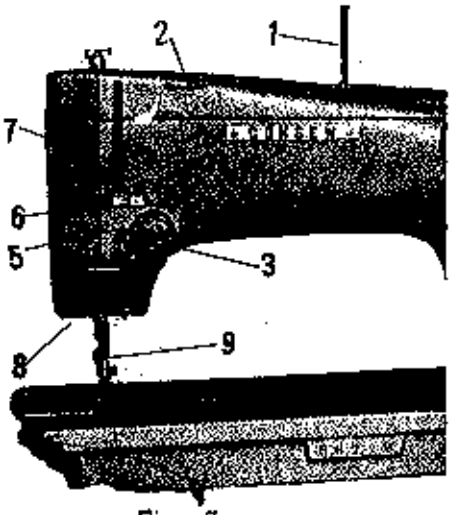

Fig 7

7, LEAD THE THREAD THROUGH THE NEEDLE BAR THREAD GUIDE (9).

8, NOW RUN THE END OF THE THREAD THROUGH THE EYE OF THE NEEDLE FROM FRONT TO BACK, DRAWING IT OUT ABOUT 2 INCHES.

PREPARATION FOR SEWING

1. THREAD THE MACHINE.
2. HOLDING THE LOOSE END OF THE NEEDLE THREAD IN UR LEET HAND, TURN THE HAND WHEEL TOWARD YOU WITH YOUR RIGHT HAND UNTIL THE NEEDLE MOVES DOWN AND UP AGAIN TO ITS HIGHEST POINT.
3. PULL THE NEEDLE THREAD GENTLY AND THE BOBBIN THREAD WILL COME UP WITH IT THROUGH THE HOLE IN THE THROAT PLATE.
4. PLACE BOTH ENDS OF THREAD BENEATH AND IN BACK OF THE PRESSER FOOT.

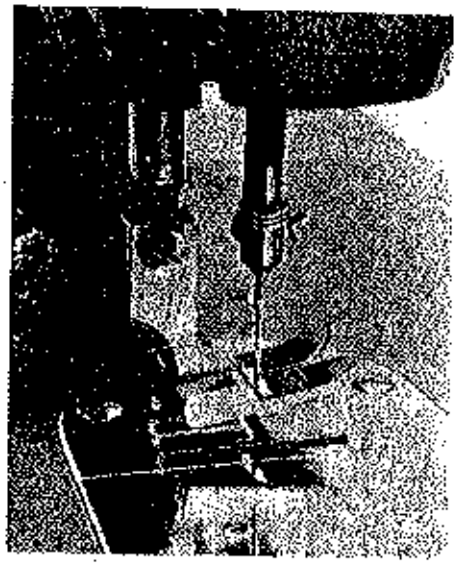

Fig 8

5. WITH THE NEEDLE RAISED, PLACE THE MATERIAL TO BE SEWN BENEATH THE PRESSER FOOT AND LOWER THE PRESSER FOOT LEVER AS FAR AS IT WILL GO.
6. START SEWING.

Fig. 9-A

Fig. 9-B

Fig. 9-C

TENSION

FOR PERFECT STITCHING THE TENSION OF THE UPPER AND LOWER THREADS SHOULD BE BALANCED AND JUST SUFFICIENTLY TIGHT TO LOCK BOTH THREADS IN THE CENTER OF THE MATERIAL. (FIG. 9-A).

IF THE TENSION OF THE NEEDLE THREAD IS TOO TIGHT, OR IF THAT OF THE BOBBIN THREAD IS TOO LOOSE, THE NEEDLE THREAD WILL LIE STRAIGHT ALONG THE UPPER SURFACE OF THE MATERIAL, MAKING AN IMPERFECT STITCH (FIG. 9-B).

IF THE TENSION OF THE BOBBIN THREAD IS TOO TIGHT, OR IF THAT ON THE NEEDLE THREAD IS TOO LOOSE, THE BOBBIN THREAD WILL LIE STRAIGHT ALONG THE UNDER SIDE OF THE MATERIAL, ALSO MAKING AN IMPERFECT STITCH (FIG. 9-C).

REGULATING THE TENSION

1. NEEDLE THREAD TENSION (FIG. 9-D)

A. THE TENSION IS INCREASED AS THE TENSION NUT (A) IS TURNED CLOCKWISE AND IT IS DECREASED AS THE NUT TURNED COUNTER-CLOCKWISE.

B. THE CHECK SPRING (C) GETS MORE TIGHT AS THE TENSION STUD (B) IS TURNED CLOCKWISE WITH A SCREW DRIVER, AND THE CHECK SPRING GETS MORE LOOSE AS THE TENSION STUD IS TURNED COUNTER-CLOCKWISE.

C. THE MACHINE IS CORRECTLY ADJUSTED BEFORE LEAVING THE FACTORY TO MAKE A PERFECT STITCH.

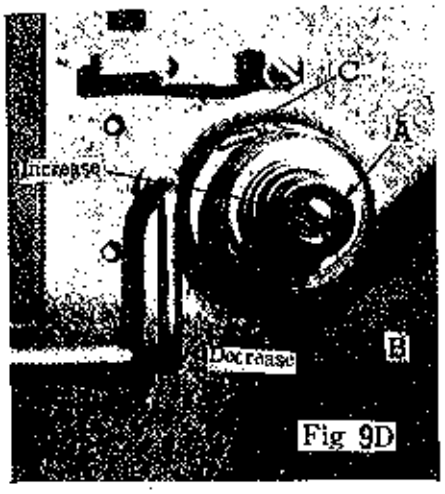

Fig 9D

NOTE: ALL TENSION ADJUSTMENTS MUST BE MADE WHILE THE PRESSER FOOT IS DOWN.

2. BOBBIN THREAD TENSION (FIG. 9-E)

A. ORDINARILY A PERFECT STITCH CAN BE OBTAINED BY VARYING THE TENSION OF THE NEEDLE THREAD ONLY. HOWEVER, IT IS SOMETIMES NECESSARY TO ADJUST THE BOBBIN THREAD TENSION

B. THIS TENSION MAY BE INCREASED BY TURNING THE TENSION SCREW (T) ON THE BOBBIN CASE TO THE RIGHT AND DECREASED BY TURNING SCREW TO THE LEFT.

Fig 9.E

Fig 10

REGULATING THE PRESSURE OF THE PRESSER FOOT

THE PRESSURE OF THE PRESSER FOOT SHOULD BE ADJUSTED ACCORDING TO THE TYPE OF MATERIAL BEING SEWN.

THE HEAVIER THE MATERIAL, THE HEAVIER THE PRESSURE: THE LIGHTER THE MATERIAL THE LIGHTER THE PRESSURE.

THE PRESSURE SHOULD BE ONLY HEAVY ENOUGH TO PREVENT THE MATERIAL FROM RISING WITH THE NEEDLE AND TO ENABLE THE FEEDER TO MOVE THE WORK ALONG EVENLY.

THE PRESSURE BECOMES TIGHTER AS THE REGULATING THUMB SCREW IS TURNED CLOCKWISE, AND LOOSER AS THE THUMB SCREW IS TURNED COUNTER-CLOCKWISE.

STITCH REGULATOR AND REVERSE SEWING OR TACKING

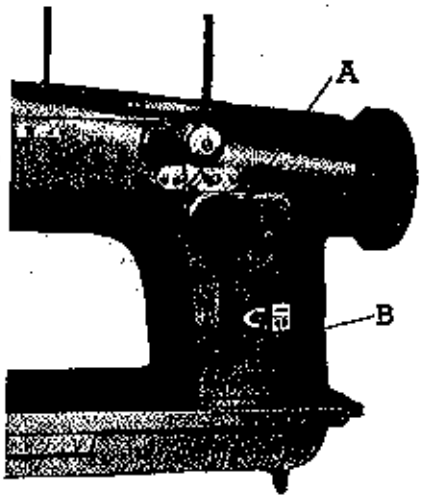

Fig 11

1. WHEN THE NUMBER O ON THE DIAL (A) IS SET UPPERMOST ON A VERTICAL LINE THE FEEDER DOES NOT MOVE THE MATERIAL.
2. WHEN THE DIAL (A) IS TURNED COUNTER-CLOCKWISE AND LEVER (B) IS RAISED AS FAR AS IT WILL GO, THE MACHINE MAKES FORWARD STITCHES, INCREASING IN SIZE AS THE DIAL KNOB IS TURNED TOWARD THE LARGER NUMBERS.
3. FOR REVERSE SEWING, LOWER THE LEVER (B) AS FOR AS IT WILL GO.
4. BY MOVING THE LEVER UP AND DOWN DURING SEWING, YOU CAN EASILY MAKE FORWARD OR REVERSE STITCHES CONTINUOUSLY AND AT WILL. YOU CAN MAKE USE OF THIS FEATURE FOR LOCKING THE THREAD AT THE START OR END OF SEAMS.

STRAIGHT AND ZIGZAG SEWING

TURNING THE ZIGZAG REGLATING KNOB Z (Fig. 12) TO THE LEFT AS FOR AS IT WILL GO, WILL CAUSE THE MACHINE TO SEW WITH A STRAIGHT STITCH.

TURNING THIS KNOB TO THE RIGHT WILL PRODUCE A ZIGZAG STITCH WHICH WILL BECOME WIDER, THE MORE THIS KNOB IS TURNED TO THE RIGHT (IN CLOCKWISE DIRECTION). THE WIDEST ZIGZAG STITCH IS BEING SEWN, WHEN THE KNOB Z CANNOT BE TURNED ANY EURTHER.

NOTE· THE ZIGZAG REGULATING KNOB CAN BE MOVED INTO ANY DESIRED POSITION WHILE THE MACHINE IS OPERATING..
DO NOT TURN ZIGZAG REGULATING KNOB WHEN MACHINE IS AT REST AND NEEDLE IS IN MATERIAL. DISREGARDING THIS ADVICE MAY HAVE BROKEN OR BENT NEEDLES AS A CONSEQUENCE·
TURN HANDWHEEL TOWARD YOU TO RAISE NEEDLE OUT OF MATERIAL BEFORE OPERATING KNOB.

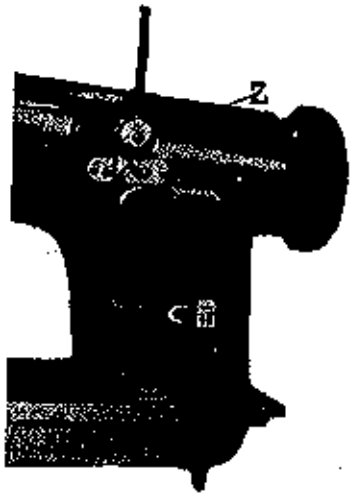

Fig 12

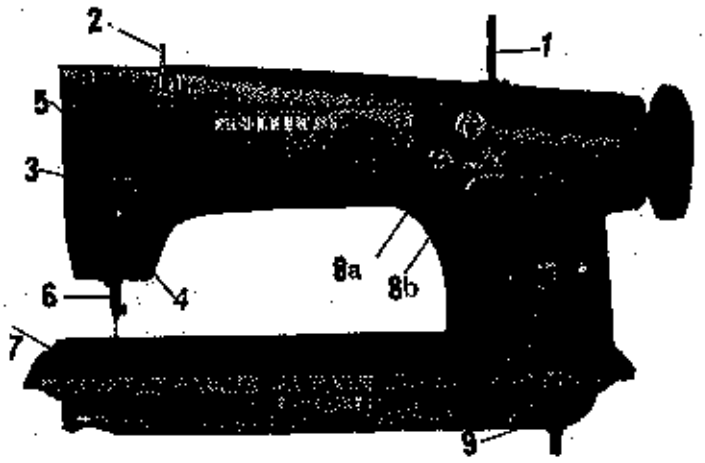

MODEL 103 Fig 13

NAMES OF MAIN PARTS

1. SPOOL PIN
2. THREAD GUIDE
3. TENSION REGULATOR
4. THREAD GUIDE
5. TAKE-UP LEVER
6. NEEDLE BAR
7. THROAT PLATE
8. a&b ADJUSTABLE STOPS
9. ZIGZAG CONTROL ROD

DESCRIPTION: MODEL 103 IS A ZIGZAG LOCKSTITCH SEWING MACHINE WITHOUT ANY FEEDING MECHANISM, FITTED FOR FLAT EMBROIDERY WORK AND MONOGRAMMING.
THE WORK IS STRETCHED OVER AN EMBROIDERY HOOP AND MOVED IN THE DESIRED DIRECTION.
THE VIBRATIONS OF THE ZIGZAGGING NEEDLE CAN BE VARIED TO ANY WIDTH UP TO APPROXIMATELY 7/16" BY MEANS OF A KNEE LEVER.

NOTES: ALL OPERATING INSTRUCTIONS FOR MODEL 99 ALSO APPLY TO MODEL 103, EXCEPT THE FOLLOWING.

THREADING THE MACHINE

1. RAISE THE THREAD TAKE-UP LEVER (5) TO ITS HIGHEST POSITION BY TURNING THE HAND WHEEL TOWARD YOU BY HAND.
2. LEAD THE THREAD THROUGH THE HOLE (1) OF THE SPOOL PIN AND THE THREE HOLES OF THE ARM THREAD GUIDE (2) STARTING FROM THE TOP HOLE.

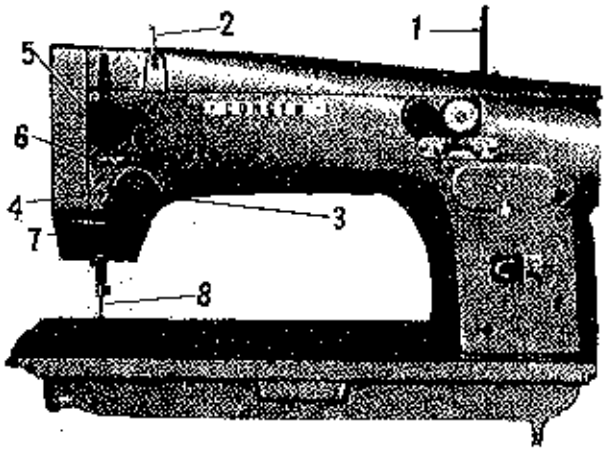

Fig 14

3. RUN THE THREAD BENEATH AND AROUND THE TENSION DISCS (3) FROM RIGHT TO LEFT.
4. BRING THE THREAD OVER THE LOOP OF THE CHECK SPRING (4)
5. PULL THE THREAD UP, RUNNING THE END THROUGH THE EYE OF THE TAKE-UP LEVER (5) FROM RIGHT TO LEFT.
6. NOW RUN THE THREAD DOWN THROUGH THE THREAD GUIDES (6)&(7).
7. NOW RUN THE END OF THE THREAD THROUGH THE EYE OF THE NEEDLE FROM LEFT TO RIGHT, DRAWING IT OUT ABOUT 3 INCHES.

OPERATING THE MACHINE FOR FLAT EMBROIDERY

PLACE MATERIAL TO BE MONOGRAMMED OR EMBROIDERED BETWEEN EMBROIDERY HOOPS, TAKING CARE THAT IT IS STRETCHED SMOOTHLY AND HELD FIRMLY. PLACE UNDER NEEDLE AND WITH LEFT HAND HOLD THE NEEDLE THREAD LEAVING IT SLACK FROM HAND TO NEEDLE. TURN HANDWHEEL TOWARD YOU TO LET NEEDLE PENETRATE MATERIAL AND TO RISE AGAIN TO ITS HIGHEST POINT, CATCHING THE BOBBIN THREAD ON ITS WAY.
PULL UP THE NEEDLE THREAD AND BOBBIN THREAD WILL COME UP WITH IT THROUGH THE MATERIAL. HOLD BOTH THREADS FLAT ON MATERIAL, THEN START TO OPERATE MACHINE. CONTINUE TO OPERATE, FEEDING WORK BY HAND AT THE SAME TIME.

REGULATING THE WIDTH OF ZIGZAG STITCH

THE WIDTH OF ZIGZAG STITCHING OR THE EXTENT OF LATERAL VIBRATIONS OF THE NEEDLE IS CONTROLLED BY THE KNEE LEVER MECHANISM WHICH IN TURN CONNECTS TO THE ZIGZAG CONTROL ROD (9) FIG.13. MOVEMENT OF THE KNEE LEVER WILL VARY THE SEAM FROM A STRAIGHT LINE UP TO APPROXIMATELY 7/16" WIDTH.
BY MEANS OF ADJUSTABLE STOPS (8_a AND 8_b) FIG 13 THE MAXIMUM AND MINIMUM STITCH WIDTHS CAN BE ADJUSTED.

SETTING THE NEEDLE BAR AT THE CORRECT HEIGHT.

MAKE SURE THAT THE NEEDLE IS PUSHED UP INTO THE NEEDLE BAR AS FOR AS IT WILL GO. REMOVE FACE PLATE FROM MACHINE.

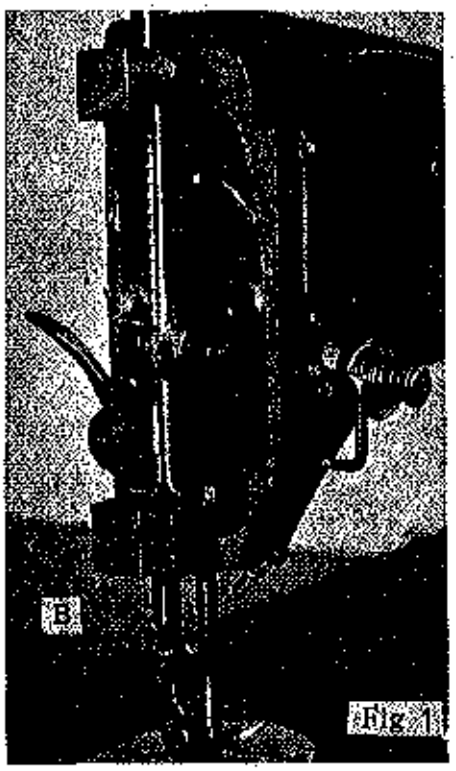

SET ZIG ZAG CONTROL KNOB FOR STRAIGHT STITCH SEWING AND TURN HAND WHEEL TOWARD YOU UNTIL THE NEEDLE REACHES THE LOWEST POINT OF ITS DOWNWARD STROKE. SEE THAT THE NEEDLE ENTERS THE NEEDLE SLOT IN THE THROAT (NEEDLE) PLATE AT THE VERY CENTER. IF IT DOES NOT, ADJUST THE NEEDLE BAR FRAME PITMAN ECCENTRIC. STUD 'A' (FIG. 2) AS DESCRIBED IN THE FOLLOWING CHAPTER.

AFTER MAKING THE NEEDED ADJUSTMENTS IN THE NEEDLE POSITION, PROCEED IN THE FOLLOWING MANNER:
REMOVE SLIDE PLATE, NEEDLE PLATE AND FEED DOG. (*)
CONTINUE TURNING HANDWHEEL TOWARD YOU UNTIL THE NEEDLE BAR HAS RISEN APPROXIMATELY 3/32" ABOVE ITS LOWEST POSITION. THE POINT OF THE SEWING HOOK SHOULD NOW BE AT THE CENTER OF THE NEEDLE AT A DISTANCE APPROXIMATELY 3/32" ABOVE THE EYE.

(*) (EXCEPT MODEL 103)

IF ADJUSTMENT SHOULD BE REQUIRED LOOSEN THE SET SCREW "B" (FIG 1) IN THE NEEDLE BER CONNECTING STUD TO RAISE OR LOWER THE NEEDLE BAR AS MAY BE NECESSARY. BE SURE TO TIGHTEN THE SET SCREW AFTER MAKING THIS ADJUSTMENT.

CENTERING THE NEEDLE IN THE THROAT (NEEDLE) PLATE.

IF IT IS INDICATED THAT THE NEEDLE NEEDS CENTERING WITHIN THE NEEDLE SLOT IN THE NEEDLE(THROAT)PLATE. SET MACHINE FOR STRAI GHT SEWING AND TURN HANDWHEEL TOWARD YOU UNTIL THE NEEDLE BAR REACHES THE LOWEST POINT OF ITS DOWNWARD STROKE. LOOSEN SET SCREW "C" (FIG 2) AND TURN ECCENTRIC STUD "A" (FIG. 2) UNTIL THE NEEDLE IS CENTERED CORRECTLY. RETIGHTEN SET SCREW "C"

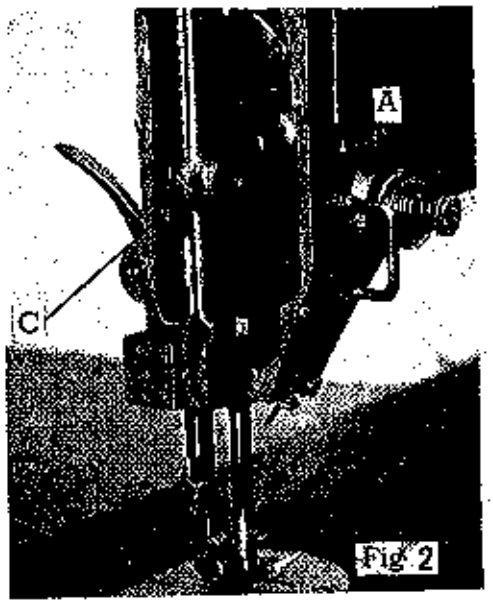

Fig. 2

SET ZIG ZAG KNOB TO WIDEST ZIG ZAG STITCH AND TURN THE HANDWHEEL TOWARD YOU AND OBSERVE THE PASSAGE OF THE NEEDLE THROUGH THE NEEDLE (THROAT) PLATE. IT SHOULD PASS AT ABOUT AN EQUAL DISTANCE FROM EITHER END OF THE NEEDLE SLOT WHEN MAKING THE LEFT AND RIGHT ZIG ZAG STITCH. IF NECESSARY READJUST ECCENTRIC STUD "A" (EIG. 2) AS DESCRIBED BEFORE.

TIMING THE SEWING HOOK.

REMOVE PRESSER FOOT, SLIDE PLATE, THROAT (NEEDLE) PLATE AND BOBBIN CASE. ALSSO REMOVE FEED DOG (NOT ON MODEL 103).

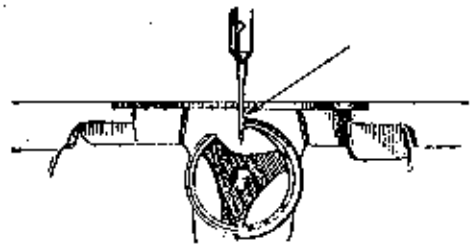

Fig 3

PLACE A NEW NEEDLE IN THE MACHINE AND TURN HANDWHEEL TOWARD YOU UNTIL THE NEEDLE BAR REACHES ITS LOWEST POINT. CONTINUE TURNING AHD ALLOW THE NEEDLE BAR TO RISE ABOUT 3/32" WHILE ON ITS UPWARD STROKE. WITH NEEDLE BAR IN THIS POSITION, THE POINT OF THE SEWING HOOK SHOULD BE AT THE CENTER OF THE NEEDLE (FIG. 3). IF THE SEWING HOOK SHOULD NOT BE TIMED CORRECTLY LOOSEN THE THREE SET SCREWS IN ITS HUB. TURN THE HOOK ON ITS SHAFT TO ALIGN THE POINT WITH THE CENTER OF THE NEEDLE AS SHOWN IN FIGURE 3. TIGHTEN THE THREE SET SCREWS.

TO REMOVE AND REPLACE THE SEWING HOOK.

REMOVE THE NEEDLE, SLIDE PLATE AND BOBBIN CASE. TAKE OUT SCREW "D" (FIG. 4) AND REMOVE HOOK RETAINER "E" (FIG. 4). LOOSEN THE THREE SET SCREWS IN THE HUB. TURN HANDWHEEL UNTIL THE THREAD GUARD (WIDEST PART) OF THE HOOK IS AT THE BOTTOM. THEN REMOVE SEWING HOOK FROM ITS SHAFT (FIG. 4).

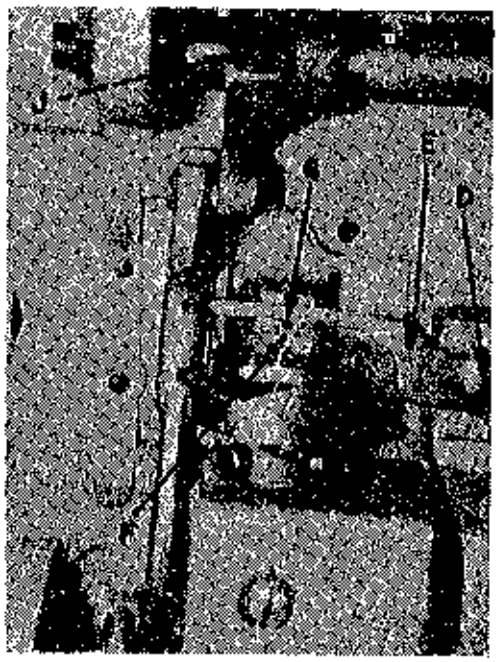

Fig 4

WHEN INSTALLING A NEW SEWING HOOK, HAVE THE THREAD GUARD AT THE BOTTOM. NOW TURN THE BOBBIN CASE HOLDER UNTIL THE NOTCH "F" IS AT THE TOP. REPLACE HOOK RETAINER "E" WATCHING THAT THE PROJECTION "G", NEAR ITS END (FIG. 4) ENTERS NOTCH "F" IN THE BOBBIN CASE HOLDER, FASTEN HOOK RETAINER TO THE UNDERSIDE OF THE BED BY MEANS OF ITS CREW. REPLACE THE NEEDLE AND TIME THE SEWING HOOK AS DESCRIBED IN THE PRECEEDING PARAGRAPH. RE-INSTALL BOBBIN CASE, THROAT PLATE AND SLIDE PLATE.

TIMING THE FEEDING MECHANISM.

THE FEEDING MECHANISM IS TIMED AT THE FACTORY FOR AVERAGE STITCHING PERFORMANCE. NORMAL TIMING IS SUCH THAT THE FEED DOG TEETH, RISING FROM THEIR LOWEST POSITION, SHOULD BE JUST FLUSH WITH THE SURFACE OF THE THROAT (NEEDLE) PLATE AFTER THE NEEDLE POINT HAS TRAVELLED ABOUT 5/16" ABOVE THE PLATE WHILE ON ITS UPSTROKE.

TO ALTER THE TIMING OF THE FEEDING MECHANISM PROCEED AS FOLLOWS REMOVE TOP COVER FROM MACHINE· TURN HANDWHEEL TOWARD YOU UNTI THE TWO SET SCREWS, LOCKING THE FEED ECCENTRIC INTO THE MAIN SHAFT, COME INTO VIEW (FIG. 5). LOOSEN BOTH SET SCREWS. LIGHTLY TAP THE FEED ECCENTRIC TOWARD YOU TO ADVANCE FEED TIMING. TO RETARD FEED TIMING, TAP ECCENTRIC TO ROTATE TOWARDREAR OF THE MACHINE.

NOTE DO NOT MOVE ECCENTRIC MORE THAN ABOUT 1/16" ROTATION AT A TIME. THEN TIGHTEN SET SCREWS AND CHECK FOR RESULTS.

TIMING THE MOVEMENT OF THE NEEDLE BAR FRAME.

SET ZIG ZAG KNOB FOR STRAIGHT STITCH, TURN HANDWHEEL AND OBSERVE TRAVEL THE NEEDLE INTO AND OUT OF THE NEEDLE SLOT IN THE THROAT (NEEDLE) PLATE. IF THE NEEDLE SHOULD NOT BE CENTERED IN THE SLOT, MAKE ADJUSTMENTS SUGGESTED IN PARAGRAPH ON CENTERING OF NEEDLE

NOW ADJUST THE NEEDLE TO PRODUCE WIDEST ZIG ZAG STITCH. TURNING THE HANDWHEEL TOWARD YOU, OBSERVE VIBRATION (SIDEWISE MOVEMENT) OF THE NEEDLE BAR. THE NEEDLE BAR ON ITS UPWARD MOVEMENT SHOULD BEGIN TO VIBRATE WHEN THE POINT OF THE NEEDLE IS NO LESS THAN ABOUT 3/32" ABOVE THE THROAT PLATE AND SHOULD END TO VIBRATE WHEN THE NEEDLE HAS REACHED APPROXIMATELY THE SAME POSITION ON ITS DOWNWARD MOVEMENT. TO ADJUST VIBRATION OF THE NEEDLE BAR, LOOSEN SET SCREW "H" (FIG. 5) IN VIBRATOR CAM AND SLIGHTLY TURN THIS CAM ON ITS SHAFT TIGHTEN SET SCREWS AND CHECK FOR RESULTS. REPEAT THIS PROCEDURE IF THE RESULTS SHOULD NOT BE SETISFACTORY

TO RAISE OR LOWER THE FEED DOG.

USUALLY WHEN AT ITS HIGHEST POSITION, THE FEED DOG SHOULD RISE ABOVE THE THROAT (NEEDLE) PLATE THE FULL DEPTH OF THE TEETH.

TO ADJUST THE POSITION OF THE FEED DOG, LOOSEN SCREW "J" (FIG. 4) AND RAISE OR LOWER THE FEED DOG AS DESIRED. THEN TIGHTEN THE SCREW. WHEN RAISING OR LOWERING THE FEED DOG BE CAREFUL THAT ITS UNDERSIDE DOES NOT DROP SO LOW THAT IT STRIKES THE HOOK.

ADJUSTMENT OF THE THREAD TAKE-UP SPRING.

THE THREAD TAKE-UP SPRING "K" (FIG. 6) SHOULD BE SET SO THAT WHEN THE EYE OF THE NEEDLE REACHES THE GOODS ON THE DOWNWARD STROKE OF THE NEEDLE BAR, THE SPRING WILL HAVE COMPLETED ITS ACTION AND WILL REST AGAINST THE STOP ON THE THREAD TAKE-UP SPRING REGULATOR.

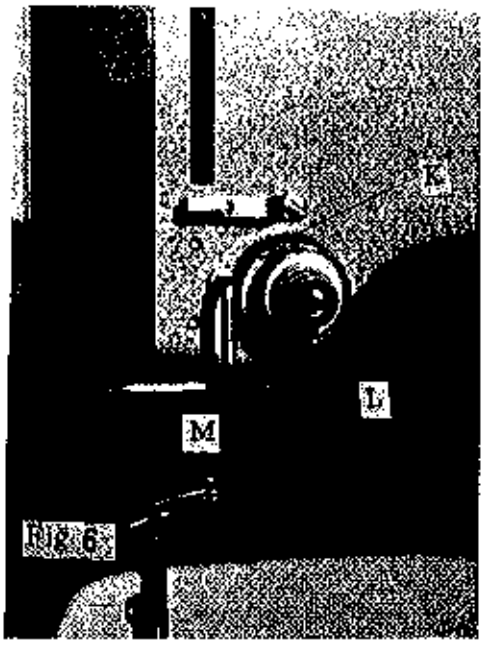

IF THE THREAD TAKE UP SPRING IS NOT SET AS OUTLINED ABOVE, LOOSEN SET SCREW "L" (FIG. 6) AND TURN TENSION STUD "M" TO THE LEFT FOR REDUCED MOVEMENT OF THE SPRING OR TO THE RIGHT FOR MORE MOVEMENT. AFTER THE TAKE UP SPRING IS SET CORRECTLY, TIGHTEN SET SCREW "L".

REGULATION OF THE TENSION OF THE THREAD TAKE UP SPRING "K" IS DONE BY TURNING THE TENSION STUD "M" TO THE RIGHT TO IN CRLASE TENSION OR TO THE LEFT TO DECREASE IT. TENSION OF THE SPRING SHOULD JUST BE ENOUGH TO TAKE UP THE SLACK OF THE NEEDLE THREAD UNTIL THE EYE OF THE NEEDLE REACHES THE MATERIAL ON ITS DOWNWARD MOVEMENT

TO RAISE OR LOWER THE FEED DOG.

USUALLY WHEN AT ITS HIGHEST POSITION, THE FEED DOG SHOULD RISE ABOVE THE THROAT (NEEDLE) PLATE THE FULL DEPTH OF THE TEETH.

TO ADJUST THE POSITION OF THE FEED DOG, LOOSEN SCREW "J" (FIG. 4) AND RAISE OR LOWER THE FEED DOG AS DESIRED, THEN TIGHTEN THE SCREW. WHEN RAISING OR LOWERING THE FEED DOG BE CAREFUL THAT ITS UNDERSIDE DOES NOT DROP SO LOW THAT IT STRIKES THE HOOK.

ADJUSTMENT OF THE THREAD TAKE-UP SPRING.

THE THREAD TAKE-UP SPRING "K" (FIG. 6) SHOULD BE SET SO THAT WHEN THE EYE OF THE NEEDLE REACHES THE GOODS ON THE DOWNWARD STROKE OF THE NEEDLE BAR, THE SPRING WILL HAVE COMPLETED ITS ACTION AND WILL REST AGAINST THE STOP ON THE THREAD TAKE-UP SPRING REGULATOR.

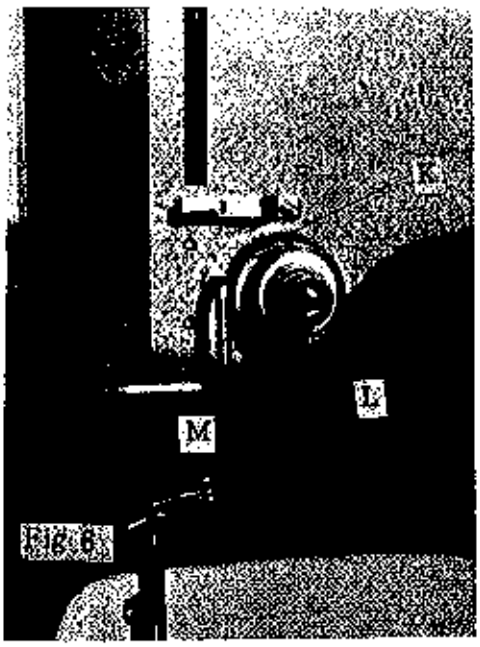

IF THE THREAD TAKE UP SPRING IS NOT SET AS OUTLINED ABOVE, LOOSEN SET SCREW "L" (FIG. 6) AND TURN TENSION STUD "M" TO THE LEFT FOR REDUCED MOVEMENT OF THE SPRING OR TO THE RIGHT FOR MORE MOVEMENT. AFTER THE TAKE UP SPRING IS SET CORRECTLY, TIGHTEN SET SCREW "L".

REGULATION OF THE TENSION OF THE THREAD TAKE UP SPRING "K" IS DONE BY TURNING THE TENSION STUD "M" TO THE RIGHT TO IN CRLASE TENSION OR TO THE LEFT TO DECREASE IT. TENSION OF THE SPRING SHOULD JUST BE ENOUGH TO TAKE UP THE SLACK OF THE NEEDLE THREAD UNTIL THE EYE OF THE NEEDLE REACHES THE MATERIAL ON ITS DOWNWARD MOVEMENT